Trade Terms	FOB Shenzhen / Guangzhou / Hongkong
Production Capacity	500,000PCS/Month
Payment	T/T, PayPal.
Delivery Time	3-7 working days for making sample. 10 to 15 working days for production.
Packing	Standard Export Cartons/Custom Cartons
Shipping	By sea, By air or by express delivery (DHL/UPS/FEDEX)
MOQ	100PCS
Place of Origin	Dongguan, Guangzhou, China
Certification	ISO13485, CE,FCC,ROHS,REACH,UKCA

product description:

Materials: PVC+ABS

POGO PIN : Gold plated

Magnetic: N52

Core: International standard pure copper 10*0.01mm

Application: smart watch charging & pogo pin charging for vacuum flask

Color: Black, white

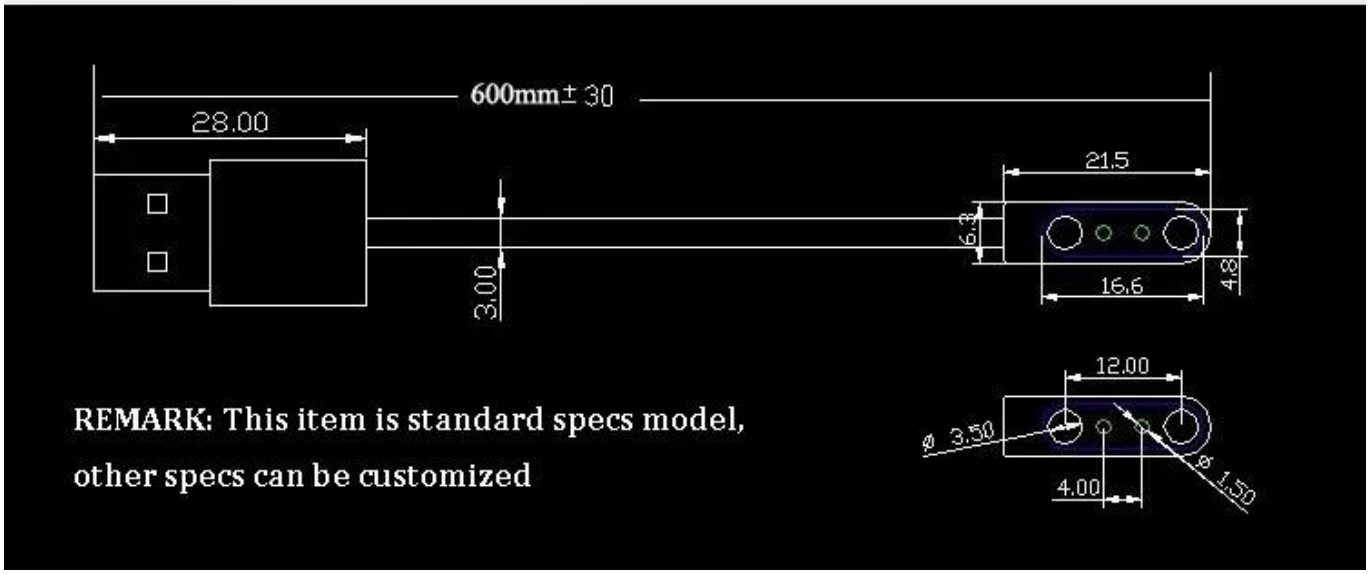

REMARK: This item is standard specs model, other specs can be customized

product description:

Materials: PVC+ABS

POGO PIN : Gold plated

Magnetic: N52

Core: International standard pure copper 10*0.01mm

Application: smart watch charging & pogo pin charging

for vacuum flask

Color: Black, white

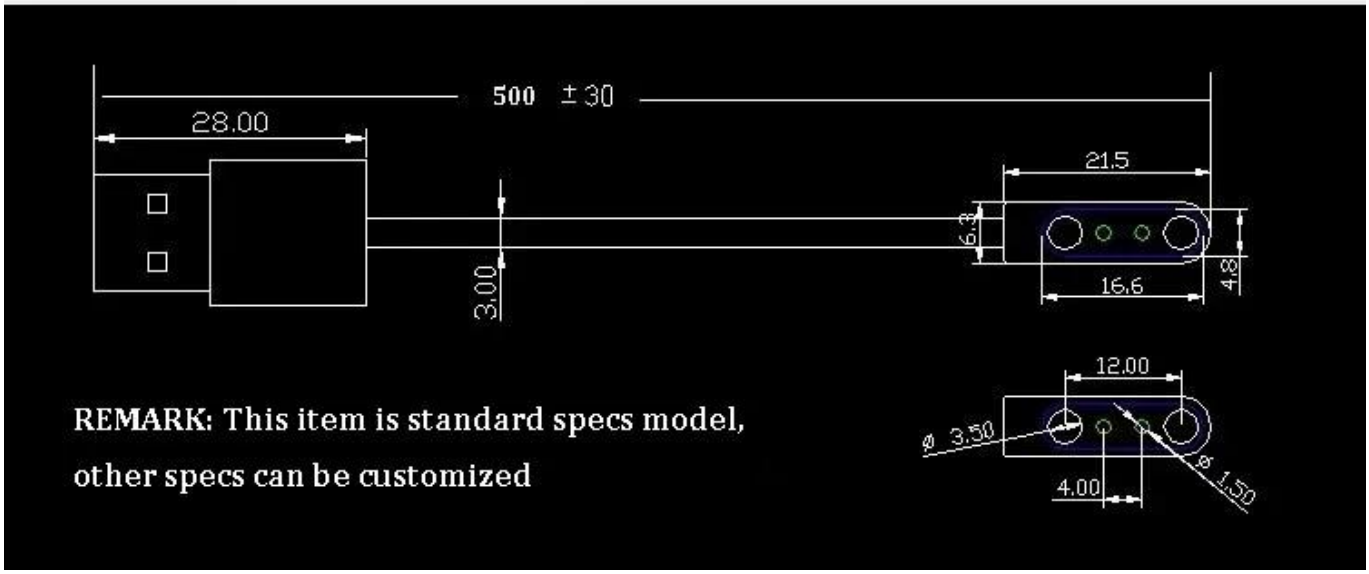

REMARK: This item is standard specs model,
other specs can be customized

Application

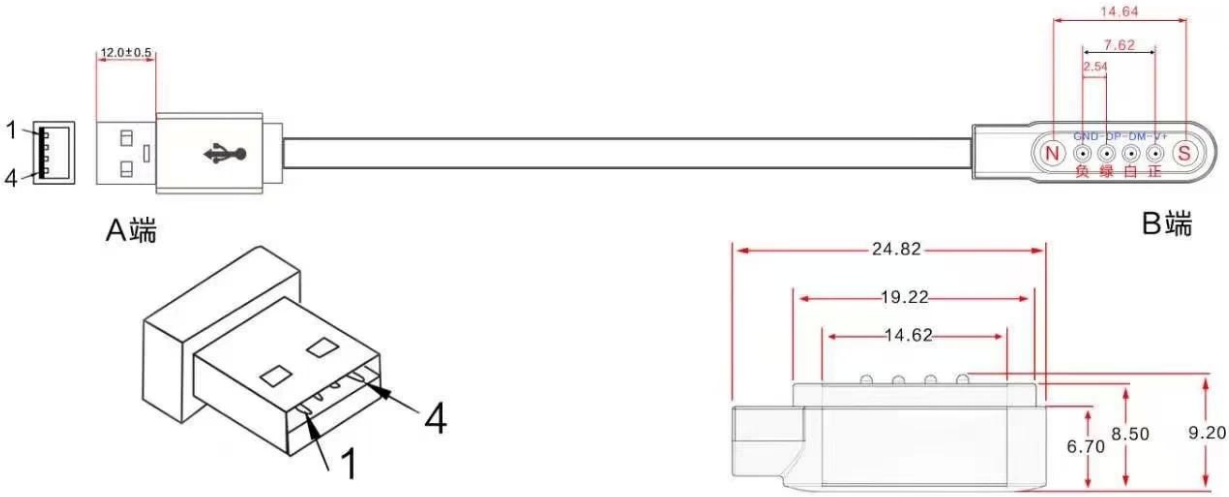

单位：mm

备注：

1.CYCX0002磁性数据线：线长0.5m，线径3.0m，颜色白色，PIN数，4pin

2.PIN角定义：VCHG--DM--DP--GND

3.磁铁极性：S（南极）--N（北极）

4.顶针长度：6mm，镀金1U，弹力30g

5.磁铁规格：3.5*4.0，材料/铷铁硼，性能

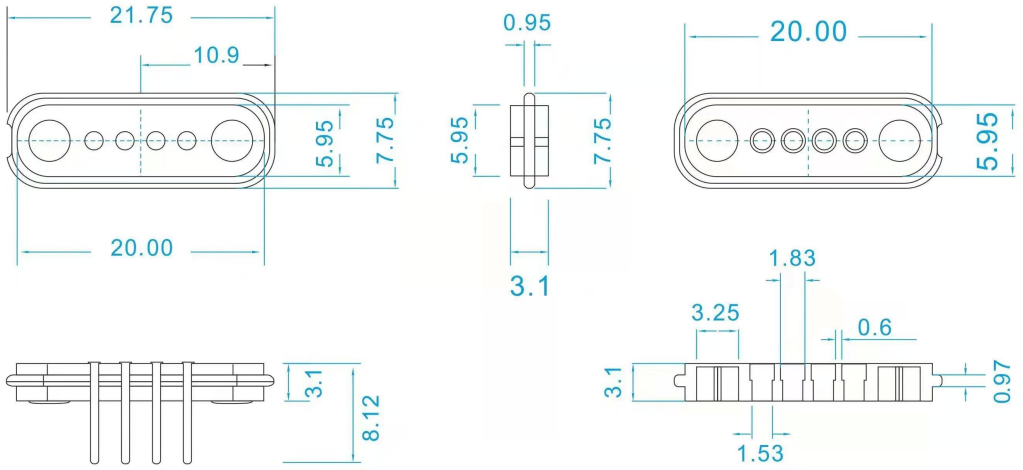

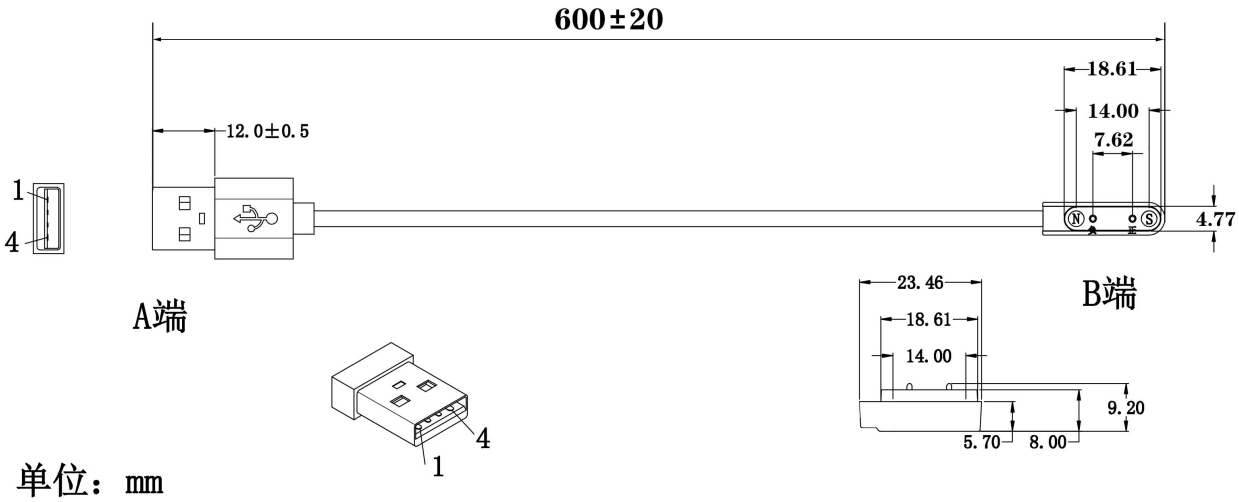

单位：mm

备注：

1.CYCX0002磁性数据线：线长0.6m,线径3.0mm，颜色白色，PIN数：2pin

2,PIN角定义：VCHG--GND

3,磁铁极性：S(南极）--N(北极）

4,顶针长度：6mm,镀金3U,弹力40g

5,磁铁规格：3.5*4.0，材料/钕铁硼，性能

6,铜丝规格：10/0.10*2c

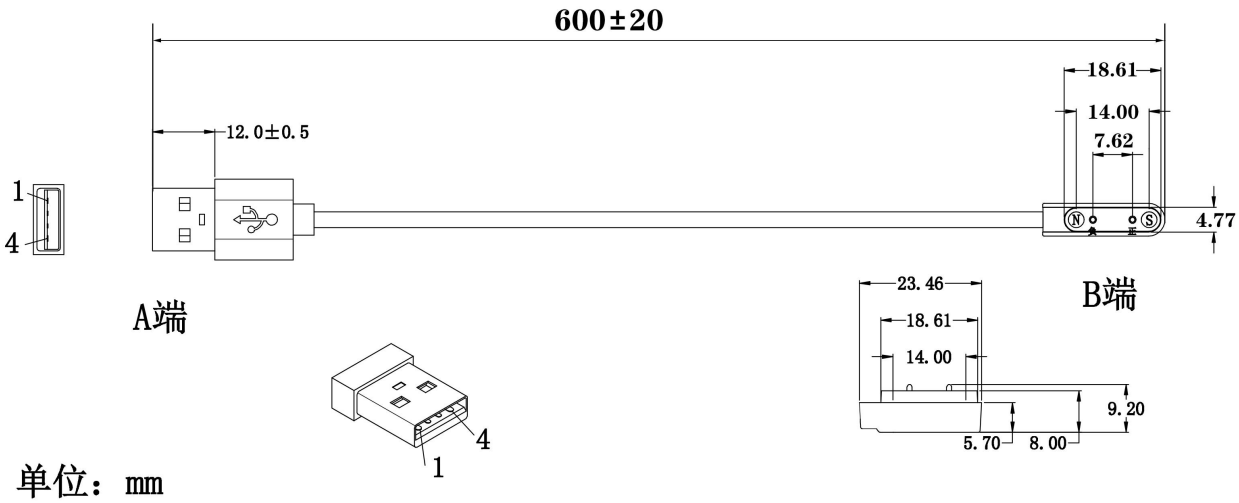

单位：mm
备注：
1.CYCX0002磁性数据线：线长0.6m,线径3.0mm，颜色白色，PIN数：2pin
2,PIN角定义：VCHG--GND
3,磁铁极性：S(南极）--N(北极）
4,顶针长度：6mm,镀金3U,弹力40g
5,磁铁规格：3.5*4.0，材料/钕铁硼，性能
6,铜丝规格：10/0.10*2c

Products Features:

Spring loaded pogo probes is common use in smart devices, especially for smart watch, smart wear, smart pads, laptop and becoming more devices choices for their charging connectors. magnetic pogo pin cable with high performance in precise adsorption during charging, magnetic designs play a important role to help the pogo contacts suck in. Moreover,gold plated pogo pin improves the charging performance as well. Currently Goochain can provide all custom pogo pin cable and connector solutions, for example:

USB to 2.84mm 2pin pogo pin cable connector

USB to 4.0mm 2pin pogo pin cable connector

USB to 7.62mm 2pin pogo pin cable connector

USB to 7.62mm 4pin pogo pin cable connector

The above model can be attached with female pogo pin connector for SMD.

We have other OEM options as well,

USB C to 5pin pogo pin cable, DC5.5*2.1 pogo pin cable, can be customized and happy to offer designs data sheet for pogo pin charging cord.

Goochain magnetic pogo pin charging cables manufacturer introduction

Goochain Technology Co.,Ltd is a professional custom cable assemblies manufacturer, it manufacturing custom usb cables, Magnetic pogo pin cables manufacturer , Medical ecg cables , PoweredUSB Cables, Ethernet cables,Medical plugs and chargers,Wiring harnesses and computer

cables , Founded in year of 2015 and we have 2000 square meters custom cable assemblies workshop, around 80 workers, 1 shift is 8 hours per day. We followed international ISO management Standard to make our custom cables, medical cables and chargers with Chinese factory price .

GOOCHAIN
东莞市谷诚电子科技有限公司
DONGGUAN GOOCHAIN TECHNOLOGY CO.,LTD
Welcome To GOOCHAIN

Product design and SOP making

Automatic wire cutting and stripping

Semi-Automatic PET Bottle Blowing

Testing before injection

Injection

Testing after injection

Performance Checking

Cable Binding

Packed and labeled for shipment

Certificates:

Goochain custom usb cables, Medical cables,computer cables,Pogo pin cables, USB Type c cables, USB Type C connectors,PD Fast chargers all has passed the international required certificate so we can export all over the world,