□□ □□	FOB □□ / □□□ / □□
□□ □□	500,000pcs / □
□□	T / T, Paypal.
□□ □□	□□□ □□□□□ 3-7 □. □□□□□ 10 ~ 15 □ □.
□□	□□ □□ □□ / □□□ □□ □□
□□	□□, □□ □□ □□□□□ □□ (DHL / UPS / FEDEX)
MOQ	500pcs.
□□□	Dongguan, □□□, □□
□□	CE, FCC, RoHS, Reach, Ukca.

□□ □□:

□ RJ45 8P8C □ □□□□ □□□□ RJ45 □□□ □□□□ □□□□□ □□ □□ □□ □□ □□ □ □□□□□ 8 □□ □ □□ □ □□□□□ □□ □□□ □□ □□ □□.

□□□ □□□ □□ □□ RJ45 RJ50 □□ □□□ □□ □□ □□□□ □□□□□ □□□ □□ □□□ □□ □ □ □□□□ □□□□ □□□ □□ □□□□.

□□□ □□ □□□ □□□□ □□□□ □□ □□□□ □□□ □□□□□

Sodering □□ RJ12 6P6C □ □□□

□□ □□ RJ45 8P8C □ □□□

□□ □□ RJ48 RJ50 10P10C □ □□□

SMT □□ □□□□ □□□, □□□ □□□ □□ □□□□□ □□□□ □□ □□□ □□□□

□□□ □□ □□□□□ □□ □□ RJ50 10P10C □□□ □□ □□□ □□ □□□,

RoHS+HF Pb Compliant

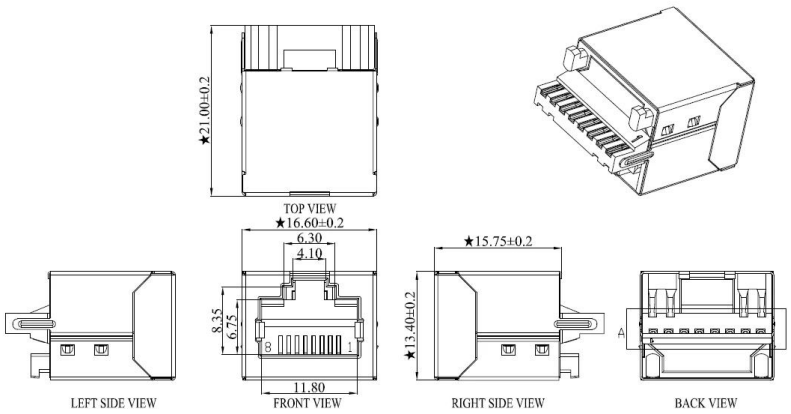

NOTES

MECHANICAL:

1. HOUSING MATERIAL: HF PBT BLACK UL94V-0
2. INSERT MATERIAL: LCP BLACK UL94V-0
3. CONTACT MATERIAL: PHOSPHOR BRONZE T=0.25mm.
4. PLATING: GOLD PLATING AT CONTACT AREA, MATTE TIN AT TAIL 100u″ MIN, NICKEL 30u″ MIN. OVER ALL
5. SHIELD: BRASS T=0.20mm PLATED NICKEL 30u″ Min .
6. OPERATING LIFE:750 CYCLES MIN.
7. MATING/UNMATING FORCE: 30N/3.06KGf MAX
8. RETENTION STRENGTH:50N MIN. FOR 60S±5S

ELECTRICAL:

1. VOLTAGE RATING: 125 VAC RMS.
2. CURRENT RATING: 1.5 AMP.
3. CONTACT RESISTANCE : 30mΩ MAX.
4. INSULATION RESISTANCE: 1000MΩ MIN. AT 500V DC .
5. DIELECTRIC STRENGTH:1000V AC OR 1500V DC RMS AT 0.5mA 50Hz/60Hz FOR 1MINUTE.

ENVIRONMENTAL:

1. STORAGE: -40℃ TO +85℃ RELATIVE HUMIDITY<80%.
2. GUARANTEE PERIOD:12 MONTHS
3. OPERATION: -40℃ TO +85℃.
4. The mark with ★ is the key inspection dimension for QC

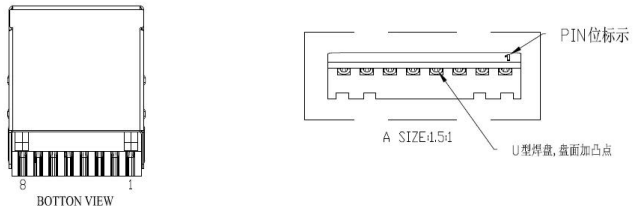

NO.	PACKING	PART NO.	Gold Plating
1	TRAY 100PCS/盘 2000PCS/箱 纸箱尺寸: 39*27.5*30CM	TM52W811EX002312113000	1u″
2		TM52W811EX003312113000	3u″
3		TM52W811EX004312113000	6u″
4		TM52W811EX005312113000	15u″
5		TM52W811EX006312113000	30u″
6		TM52W811EX007312113000	50u″

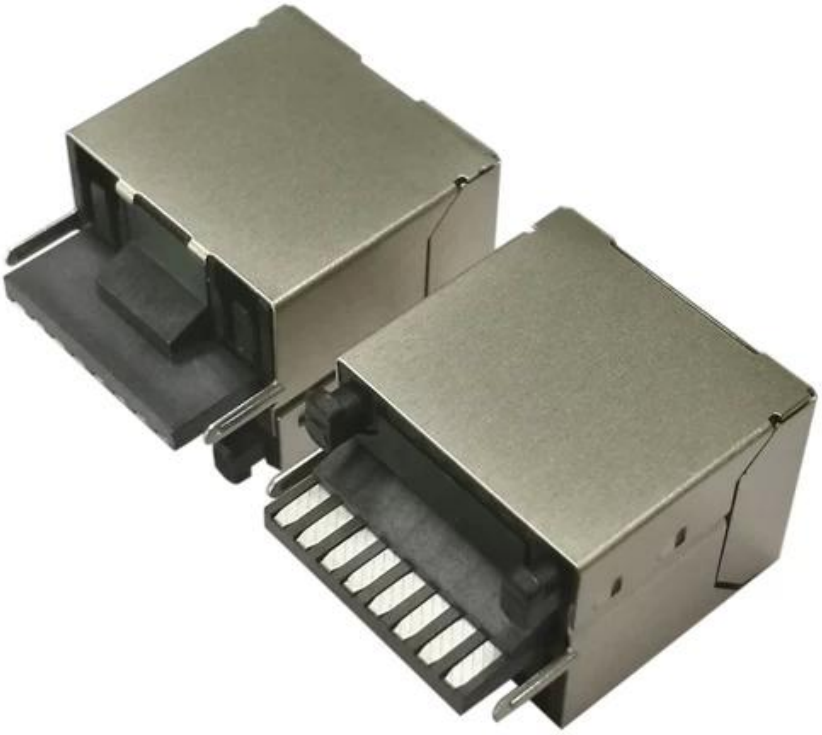

Sodering □□ □□ RJ45 8P8C □□ [□□□ □□□□ □□]

Goochain □□ □□ □□□ □□ □□□ □□ □□□ □□□□ □□ □□, □□ □□□ □□ USB □□□, □□□□ □□ □ □□□ □□ □□, □□ ECG □□□, Poweredusb □□ □□□, □□□ □□□, □□ □□□ □ □□□, □□ □□□ □ □□□ □□□, □□ □□□ □ □□□ □□□ 2015 □□ □□□ 2000 □□ □□□ □ □□ □□□ □□□□ □□□, □ 80 □□ □□□, 1 □□□ □□□ 8 □□□□□. □□□ □□□ □□ □□□, □□ □□□ □ □□□□ □□ □□ □□□□ □□□ □□ ISO □□ □□□ □□□□□.

□□□ :

Goochain □□□ USB □□□, □□ □□□, □□□ □□□, □□ □ □□□, USB □□ C □□□, USB □□ C □□□, PD □□ □□□, Poweredusb □ □ □□□ □□ □□ □□ □□□□ □□ □□□□ □□□ □ □□□ □□ □ □ □□□□,

□□□□ □□

Q1 : □□□□ □□ □□ □□ □□□ □□□ □ □□□□?

A : □□, Goochain□ □□□□□ □□ □□ □□□ □□□□□. □□ □□□ □□ □□□ □□□□□□□. □□□ □□□ □□□□ □□ □□□ □□ □□□□ □□□□□□.

Q2 : □□ □□ □□□ □□□□□?

A : Alibaba Trade Assurance, PayPal, T / T, □□ □□, □□□ □□□ □ L / C

Q3 : □□□ □□□ □□ □□□ □□ □□□ □□□□□?

A : □□□ □□□□□. □□ □□ □□ □□□□□□ QC □□□ □□□□ □□□ □□ □□□ □□□□ □□□□□. □□□ □□□ ROHS, SGS, CE FCC, ISO9001 : 2008 □□□ □□□□□□. □

Q4 : □□? □! □□ □□□ □□□ □□□□□ □□□□ □□□□ □□ □□ □□ □□□□ □□□ □□□ □□ □ □ □□□□?

A : □, □□□ 100 □ □□□ □□□□□ □□□□□. □□□ OEM / ODM □□□□ □□□□□. □□ □□□ □□□□□ □□ □□ □□ □□□□□ □□□□□□.

Q5 : □□ □□ □ □□? □ □□□ □□□ □□ □□□□ □□□□□?

A : □□□ □□ □□□ □ 2-4 □ □□□□, □□□ □□ □□ 12 □□ □□□ □□ □ □ □□□□. □□□ DHL, FedEx, UPS, TNT, EMS□ □□□□ □□□ □□□.

Q6 : □□□ □□□ □□□ □□□□? □□□ □□□□ □□ □ □ □□□□?

A : □□. □□□ □□□□ □□□ □□ □□□ □□ □□□ □□□ □□ □□□ □□□ □□□□□□. □□ □□□ 3RD□ □□□□. □□, □□ A, No.8 Kangyang 1st Street, Shebei Village, Huangjiang Town, Dongguan City, Guangdong, China.