[illegible]	FOB Shenzhen / Guangzhou / Hongkong
[illegible]	500,000[illegible]/[illegible]
[illegible]	T / T[illegible]PayPal[illegible]
[illegible]	[illegible]3-7[illegible]10[illegible]15[illegible]
[illegible]	[illegible]/[illegible]
[illegible]	[illegible]DHL / UPS / FedEx[illegible]
mo	500[illegible]
[illegible]	[illegible]
[illegible]	CE[illegible]FCC[illegible]RoHS[illegible]Reach[illegible]Ukca

[illegible]

[illegible]RJ50 10P10C[illegible]RJ50[illegible]10[illegible]

[illegible]RJ12 RJ45 RJ48 RJ50[illegible]

[illegible]

[illegible]RJ12 6P6C[illegible]

[illegible]RJ45 8P8C[illegible]

[illegible]RJ48 RJ50 10P10C[illegible]

SMT[illegible]

[illegible] [illegible]RJ50 10P10C[illegible] [illegible]

RoHS+HF Pb Compliant

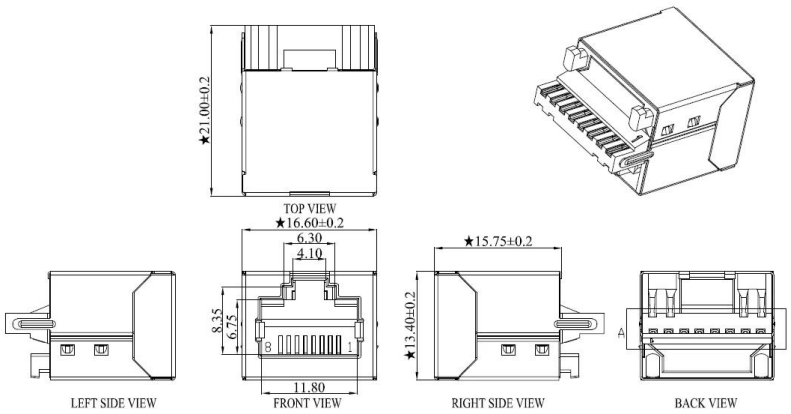

NOTES

MECHANICAL:

1. HOUSING MATERIAL: HF PBT BLACK UL94V-0
2. INSERT MATERIAL: LCP BLACK UL94V-0
3. CONTACT MATERIAL: PHOSPHOR BRONZE T=0.25mm.
4. PLATING: GOLD PLATING AT CONTACT AREA, MATTE TIN AT TAIL 100u″ MIN, NICKEL 30u″ MIN. OVER ALL
5. SHIELD: BRASS T=0.20mm PLATED NICKEL 30u″ Min .
6. OPERATING LIFE:750 CYCLES MIN.
7. MATING/UNMATING FORCE: 30N/3.06KGf MAX
8. RETENTION STRENGTH:50N MIN. FOR 60S±5S

ELECTRICAL:

1. VOLTAGE RATING: 125 VAC RMS.
2. CURRENT RATING: 1.5 AMP.
3. CONTACT RESISTANCE : 30mΩ MAX.
4. INSULATION RESISTANCE: 1000MΩ MIN. AT 500V DC .
5. DIELECTRIC STRENGTH:1000V AC OR 1500V DC RMS AT 0.5mA 50Hz/60Hz FOR 1MINUTE.

ENVIRONMENTAL:

1. STORAGE: -40℃ TO +85℃ RELATIVE HUMIDITY<80%.
2. GUARANTEE PERIOD:12 MONTHS
3. OPERATION: -40℃ TO +85℃.
4. The mark with ★ is the key inspection dimension for QC

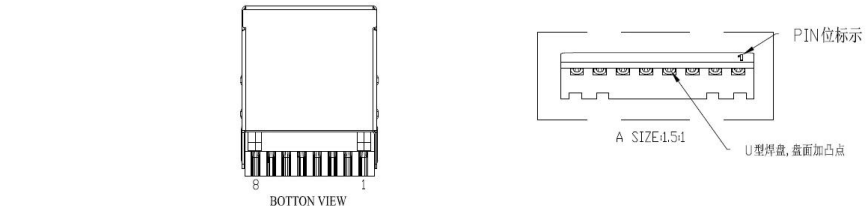

NO.	PACKING	PART NO.	Gold Plating
1	TRAY 100PCS/盘 2000PCS/箱 纸箱尺寸: 39*27.5*30CM	TM52W811EX002312113000	1u″
2		TM52W811EX003312113000	3u″
3		TM52W811EX004312113000	6u″
4		TM52W811EX005312113000	15u″
5		TM52W811EX006312113000	30u″
6		TM52W811EX007312113000	50u″

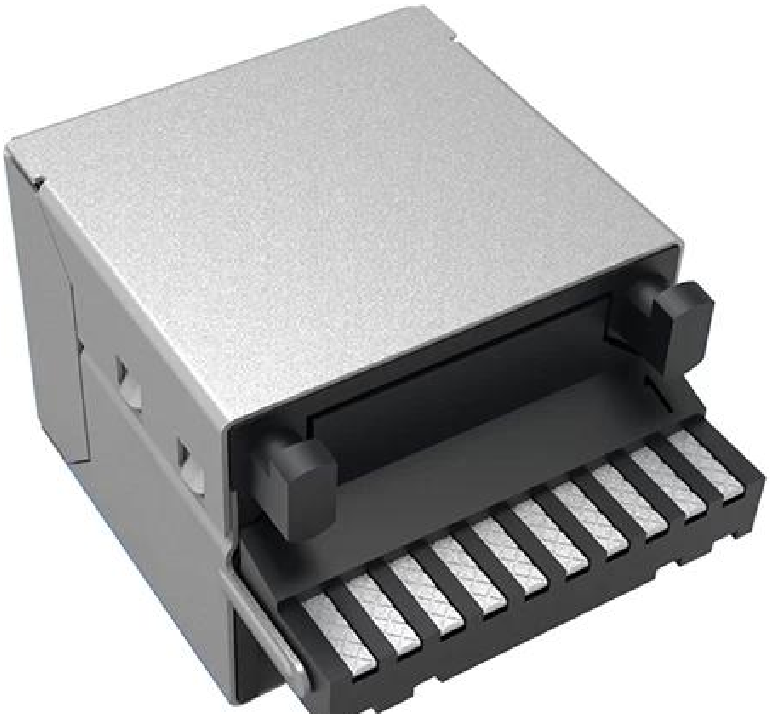

[illegible]RJ50 10P10C[illegible] [illegible]

Goochain Technology Co.[illegible]Ltd[illegible]USB[illegible]ECG[illegible]PoweredUSB[illegible]2015[illegible]2000[illegible]1[illegible]1[illegible]8[illegible]ISO[illegible]

□□□□

Goochain□□□□USB□□□□□□□□□□□□□□□□□□□□Pogo Pin□□□□□USB□□□C□□□□□USB□□□C□□□□□USB□□□C□□□□□PD FAST CHARGERS□POWEREDUSB EXTERS CABLES ALL□□□□□□□□□□□□□□□□□□□□□□□□□□□

□□□□□

Q1□□□□□□□□□□□□□□□□□□□□□□□□□□□□□□

A□□□□□GooChain□□□

Q2□□□□□□□□□□□□□□□□□□□□□□□□

A□□□□□□□□□PayPal□T / T□□□□□□□□□□□□□□□□□□□L / C

Q3□□□□□□□□□□□□□□□□□□□□□□□□□□□□□□□□□□□□

A□□□□□□□□□□□□□□□□□□□□□□QC□□□RoHS□SGS□CE FCC□ISO9001□2008□□□□□□□□ NS

Q4□□

A□□□□□□□□□□100□□□□□□□□□□□□□□□□□□□ OEM / ODM□□□

Q5□□□

A□□□□□□□□□□□□□□□□2~4□□□□□□□□□□12□□□□□□□□□□□□□□□□□□□□□DHL□Fedex□UPS□TNT□□□□□□EMS□□□□□□□□□

Q6□□

A□□□□□□□□□□□Dongguan□□3□□□□□□□□□□□□□□□A□A□No.8 Kangyang 1st Street□Shebei Village□Huangjiang Town□Dongguan City□□□□□□□□